JEE-O

Wall mounted mixer with progressive cartridge

Wand mengkraan met progressieve cartridge

700-2102

installation

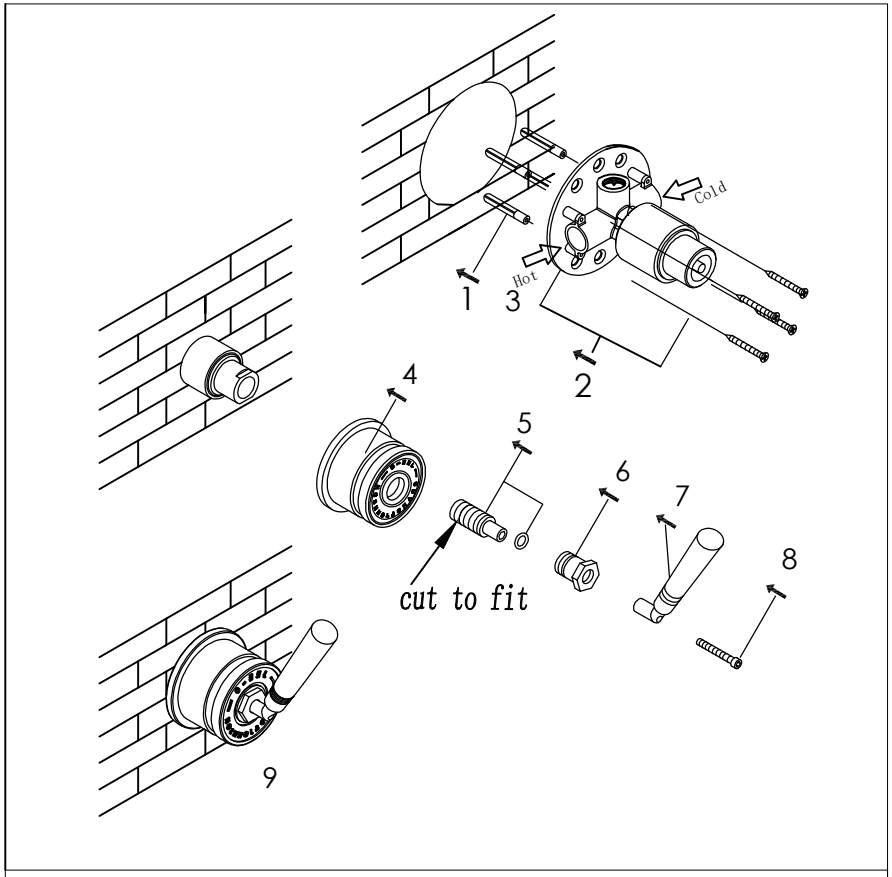

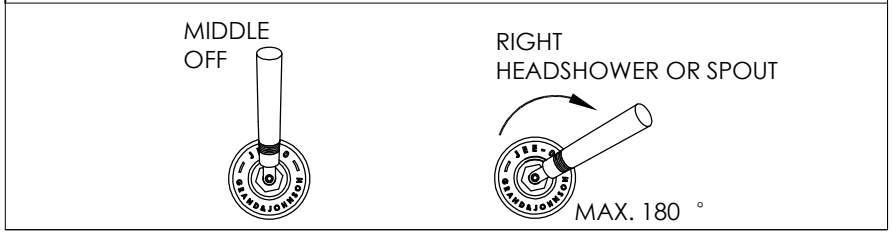

technical diagram

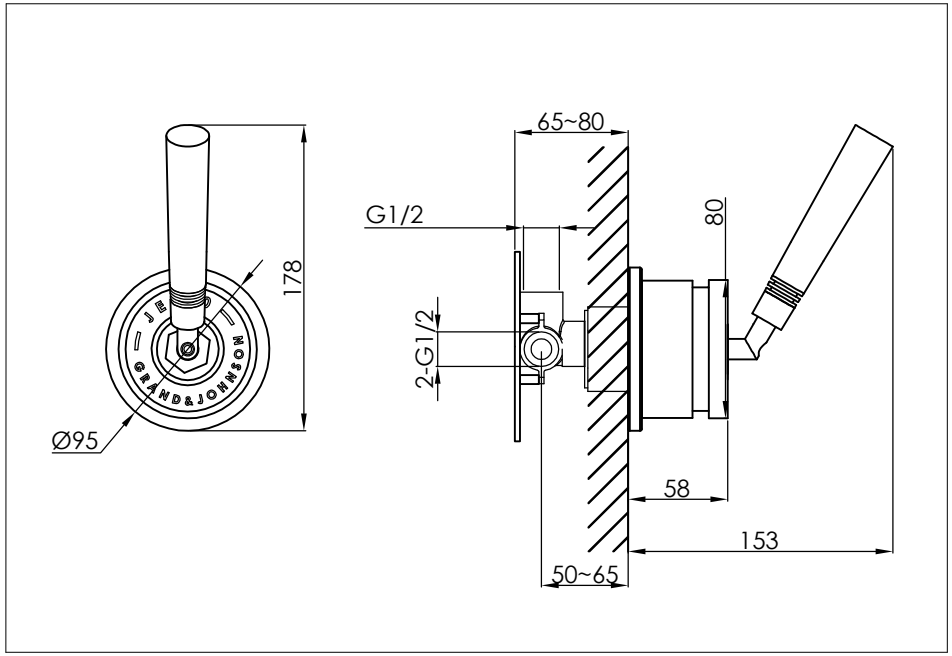
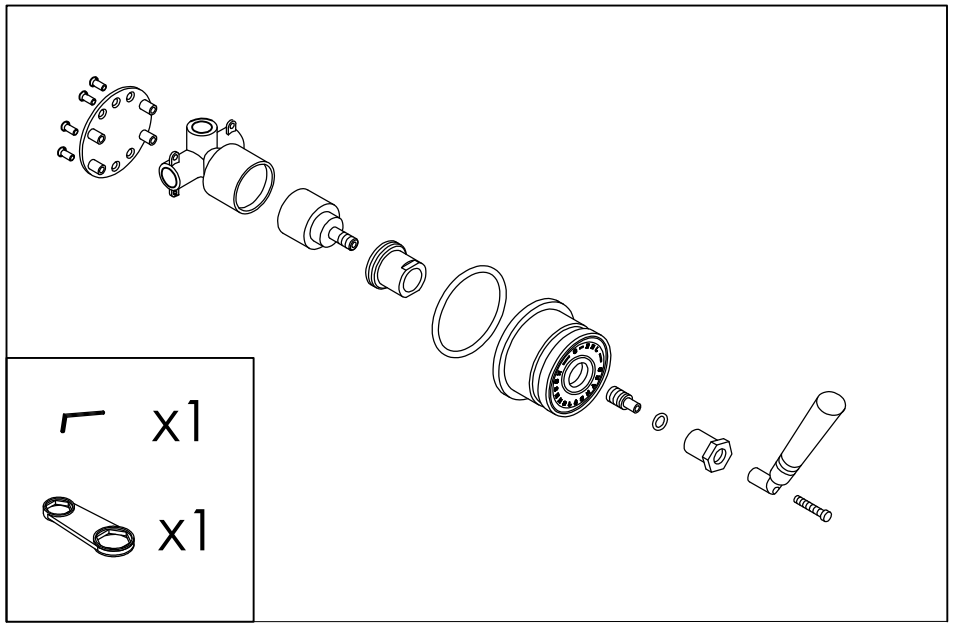
explosion diagram